5.0mm Round Type LED Lamps

MODEL NO: IE-5RDSG9SW-B/11

★Features:

- Two chips are matched for uniform light output;
- Long life-solid state reliability;
- IC compatible/low power consumption;

★Lens Color:

☐ Water Clear ☑ White Diffused

★Descriptions:

- The LED Lamp contains two integral chips And is available as both bicolor and bipolar types;
- The Super Red and Super Green Light are emitted by diodes of GaAlAs and GaP respectively;

★Applications:

- TV set
- Monitor
- Telephone
- Computer

★Package Dimension:

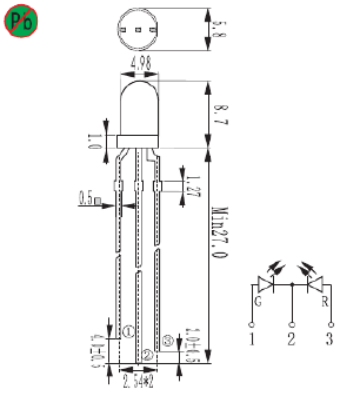

★Notes:

1、All dimensions are in millimeters(inches);
2、An epoxy meniscus may extend about 1.5mm(0.059") down to the lead;
3、Tolerances unless dimension ±0.25mm.

★Absolute Maximum Ratings(Ta=25℃):

Parameter	Symbol	Rating	Unit	Remark
Forward Current	I_{FM}	30	mA	——
Peak Forward Current	I_{FP}	100	mA	1/10 Duty Cycle
Reverse Voltage	V_R	5	V	——
Operating Temperature	T_{Opr}	-25 + 85	℃	——
Storage Temperature	T_{Stg}	-40 + 100	℃	——
Soldering Temperature	T_{Sol}	260	℃	≤3 seconds
Power Dissipation	Pd	100	mW	——

★Electronic Optical Characteristics(Ta=25℃):

Part Number	Emitting Color	V_F(V) I_F=20mA			I_V(mcd) I_F=20mA		I_R(μA) VR=5V	λ_m(nm)	$\Delta\lambda$(nm)	Viewing Angle $2\theta_{1/2}$(°)
		Min	Typ	Max	Typ	Max				
IE-5RDSG9SW-B/11	RED	1.65	2.1	2.4	500	1000	<10	620-630	25	60°
	GREEN	2.8	3.1	3.8	1150	2800		518-530	25	

★Elucidation: Pb =Pb free Soldering Application, Pb<1000ppm(RoHS-Compliant)