ROHS

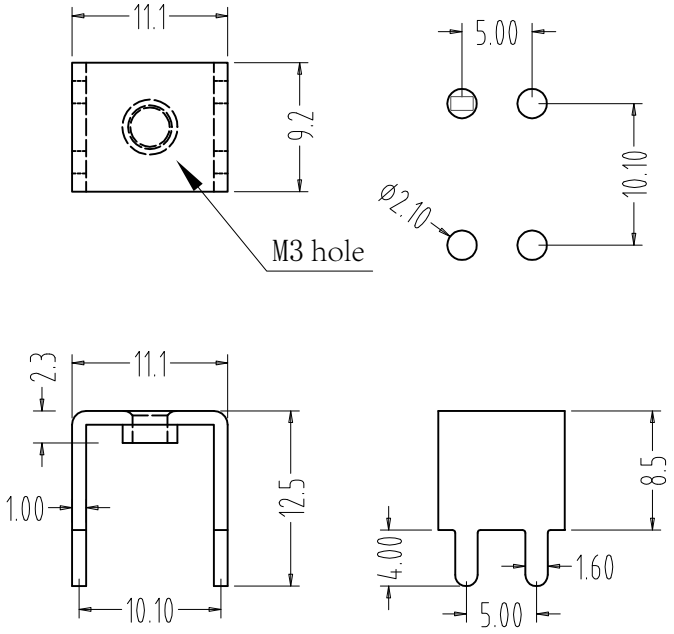

Technical requirements:

1. Visual appearance - no scratches, bruises, burrs, uneven feet, crooked feet, eccentricity, deformation, oxidation of raw material surface.
2. The dimensions of each part are within the tolerance range, and the reference tolerance is not marked.
3. Length, width and height: 11.1*9.2*12.5mm
4. Package pitch: 5.0*10.1mm
5. Rated current: 50A
6. Wire screw hole: M3
7. Material thickness: 1.0mm brass
8. Base plate height: 8.6mm
9. Screw torque: 11 1bf.in 10. Surface treatment: Tinned

Tolerance			***	Materal	1.0*35.0mm	Part name	IE-PCB-8.5-M3	Unit	mm	Approved	
Dimension	Angle		***	Step& Width	10.4mm	Die No	387	scale	1:1	Checked	2023.12.12
0. ±0.4 0.0 ±0.20 0.00 ±0.05	0. ±2° 0.0 ±1° 0.00 ±0.5°			Mater Up	**	Mold	*	Rev	A	Designed	
				Project							
	E-**				PaGe						